RPS CROSS COUNTRY 300 PARTS CATALOGUE

Frame.Front foot pegs, helmet lcok						
No	Code	Chinese	English	Qty	Unit	Remark
1	C-00-001	车架	Frame	1	set	
2	C-00-002	前左右脚蹬	L/R Front foot pegs	1	pair	
3	C-00-003	六角带盘螺栓M6×10	Hex bolt M6x10	2	pcs	
4	C-00-004	头盔锁	Helmet lock	1	pcs	

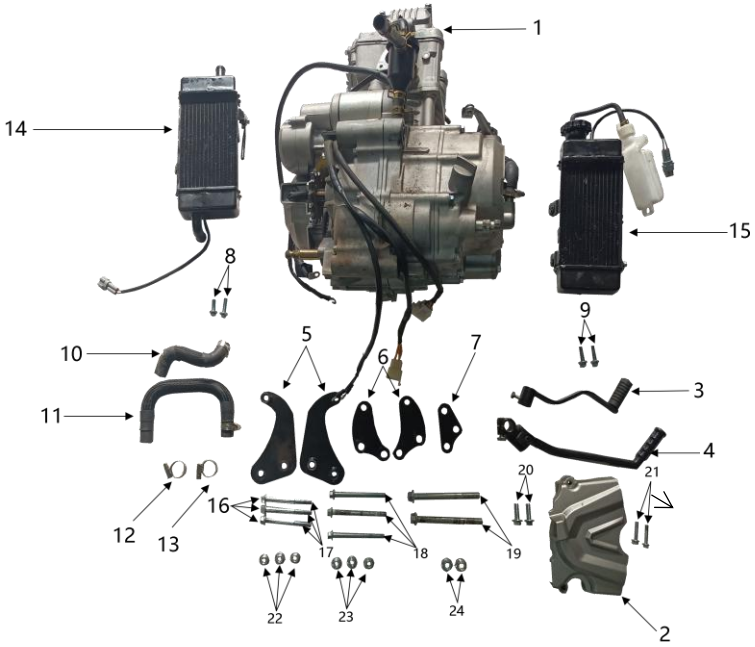

Engine,Water tank,Engine Suspension						
No	Code	Chinese	English	Qty	Unit	Remark
1	F-00-001	发动机总成	Engine complete	1	pcs	
2	F-00-002	尾盖	Engine tail cover	1	pcs	
3	F-00-003	变档杆	Gear shifter	1	pcs	
4	F-00-004	启动臂	Kick starter	1	pcs	
5	F-00-005	发动机上悬挂	Upper suspension, engine	2	pcs	
6	F-00-006	发动机前左右悬挂	L/R front suspension, engine	2	pcs	
7	F-00-007	发动机后悬挂	Rear suspension, engine	1	pcs	
8	F-00-008	六角带盘螺栓M6×20	Hex bolt M6x20	2	pcs	
9	F-00-009	六角带盘螺栓M6×20	Hex bolt M6x20	2	pcs	
10	F-00-010	水箱水管	Hose, water tank	1	pcs	
11	F-00-011	水箱水管	Hose, water tank	1	pcs	
12	F-00-012	水箱左下水管抱箍	Clamp,hose	1	pcs	
13	F-00-013	水箱右下水管抱箍	Clamp,hose	1	pcs	
14	F-00-014	左水箱	L water tank	3	pcs	
15	F-00-015	右水箱（水壶）	R water tank(plastic)	2	pcs	
16	F-00-016	六角带盘螺栓M8×75	Hex bolt M8x75	3	pcs	
18	F-00-018	六角带盘螺栓M8×85	Hex bolt M8x85	2	pcs	
19	F-00-019	六角带盘螺栓M8×90	Hex bolt M8x90	2	pcs	
20	F-00-016	六角带盘螺栓	Hex bolt	3	pcs	
21	F-00-017	发动机后悬挂自锁螺母M8	Nut M8, engine rear suspension	2	pcs	
22	F-00-018	自锁螺母M8	Self locked nut M8	3	pcs	
23	F-00-019	自锁螺母M8	Self locked nut M8	3	pcs	
24	F-00-019	自锁螺母M8	Self locked nut M8	2	pcs	

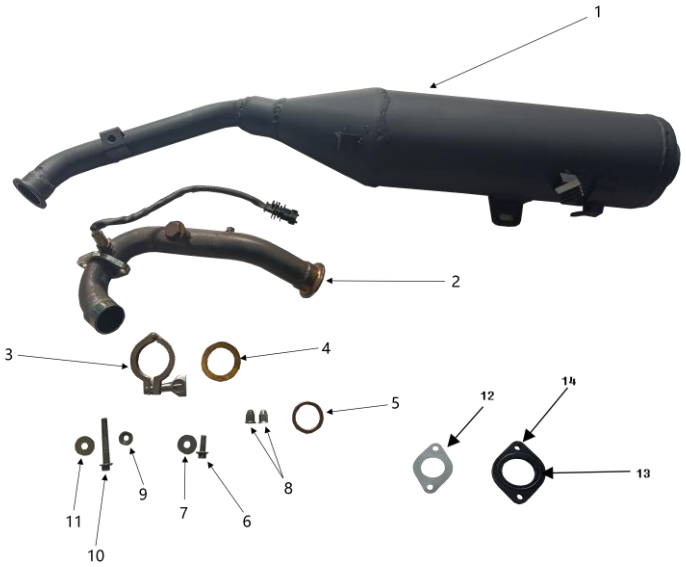

Muffler comp						
No	Code	Chinese	English	Qty	Unit	Remark
1	X-00-001	消声器筒体	Muffler	1	pcs	
2	X-00-002	消声器前段	Muffler, front	1	pcs	
3	X-00-003	消声器前段与后段连接抱箍	Clamp, muffler connection	1	pcs	
4	X-00-004	石棉垫	Asbestos washer	1	pcs	
5	X-00-005	消声器垫	Washer,muffler	1	pcs	
6	X-00-006	消声器与发动机紧固盖形螺母	Caped nut,muffler and engine	2	pcs	
7	X-00-007	加大平垫ϕ8×25	Flat washer ϕ8×25	1	pcs	
8	X-00-008	消声器与发动机紧固盖形螺母	Caped nut,muffler and engine	2	pcs	
9	X-00-009	平垫圈	Flat washer	1	pcs	
10	X-00-010	消声器筒体前端与车架连接螺栓	Bolt,front muffler and frame	1	pcs	
11	X-00-011	加大平垫ϕ8×25	Flat washer ϕ8×25	1	pcs	
12	X-00-012	隔热垫	Heat insulation washer	1	pcs	
13	X-00-013	橡胶圈	Rubber ring	1	pcs	
14	X-00-014	胶木垫	Gasket	1	pcs	

Frong wheel comp						
No	Code	Chinese	English	Qty	Unit	Remark
1	L-01-001	前轮胎	Front tire	1	set	
2	L-01-002	前轮毂	Front rim complete	1	set	
3	L-01-003	前碟刹盘	Front brake disc	1	pcs	
4	L-01-004	前轮轴	Front axle	1	pcs	
5	L-01-005	前轮左衬套	L bushing, front wheel	1	pcs	
6	L-01-006	自锁螺母M12×1.25	Self locked nut M12x1.25	1	pcs	
7	L-01-007	碟刹盘与前轮连接螺栓	Bolt, front rim and brake disc	6	pcs	

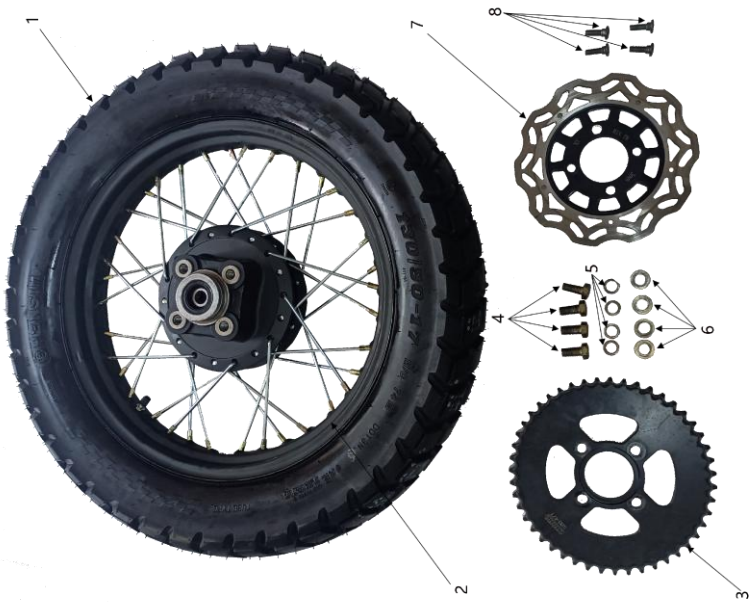

Rear wheel comp						
No	Code	Chinese	English	Qty	Unit	Remark
1	L-02-001	后轮胎	Rear tire	1	set	
2	L-02-002	后轮毂	Rear rim	1	set	
3	L-02-003	链盘	Rear sprocket	1	pcs	
4	L-02-004	六角螺栓M12×35×1.75	Hex bolt M12x35x1.75	4	pcs	
5	L-02-005	弹垫ϕ12	Spring washer ϕ12	4	pcs	
6	L-02-006	平垫ϕ12	Flat washer ϕ12	4	pcs	
7	L-02-007	后碟刹盘	Rear brake disc	1	pcs	
8	L-02-008	碟刹盘与后轮连接螺栓	Bolt, brake disc and rear rim	4	pcs	

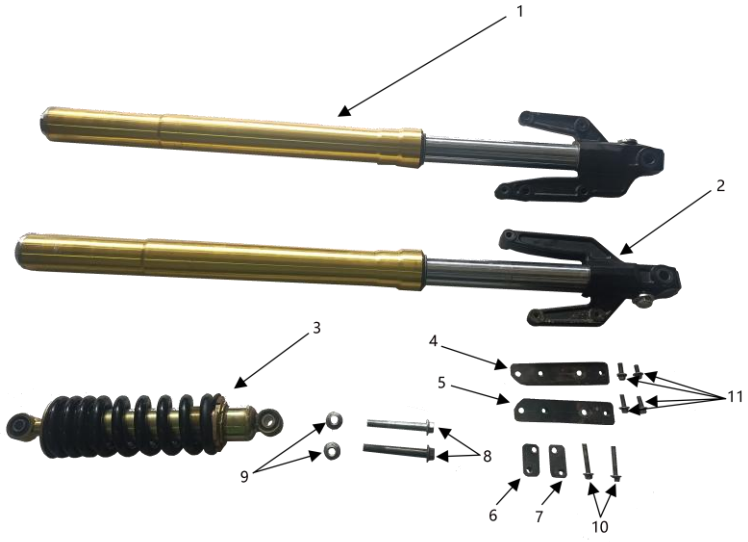

Front and rear shocks						
No	Code	Chinese	English	Qty	Unit	Remark
1	J-02-001	前左减震器	L front shock	1	件	
2	J-02-002	前右减震器	R front shock	1	件	
3	J-02-003	后减震器	Rear shock	1	件	
4	J-02-004	前左挡泥支板架	Bracket, L front part, front fender	1	件	
5	J-02-005	前右挡泥板支架	Bracket, R front part, front fender	1	件	
6	J-02-006	后左挡泥板支架	Bracket, L front part, rear fender	1	件	
7	J-02-007	后左挡泥板支架	Bracket, R front part, rear fender	1	件	
8	J-02-008	六角带盘螺栓M10×80×1.25	Hex bolt M10x80x1.25	2	件	
9	J-02-009	自锁螺母M10×1.25	Self locked nut M10x1.25	2	件	
10	J-02-010	螺栓	Bolt	2	件	
11	J-02-011	螺栓	Bolt	4	件	

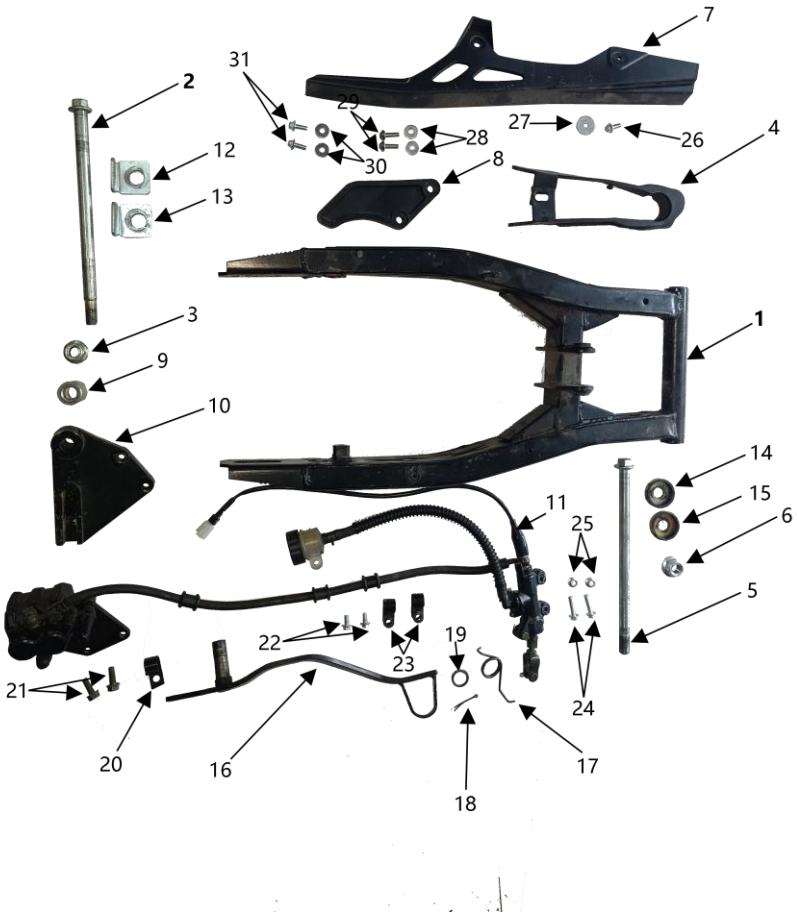

Rear Fork,Chain cover, Rear brake						
No	Code	Chinese	English	Qty	Unit	Remark
1	P-00-001	平叉	Rear fork	1	pcs	
2	P-00-002	后轮轴	Rear axle	1	pcs	
3	P-00-003	自锁螺母M14×1.5	Self locked nut M14x1.5	1	pcs	
4	P-00-004	链条护卡	Chain guard(rubber)	1	pcs	
5	P-00-005	平叉轴	Axle, rear fork	2	pcs	
6	P-00-006	自锁螺母M14×1.5	Self locked nut M14x1.5	2	pcs	
7	P-00-007	链盒	Chain cover	2	pcs	
8	P-00-008	链条挡块	Chain guide	1	pcs	
9	P-00-009	后轮轴右衬套	R bushing, rear axle	1	pcs	
10	P-00-010	后碟刹支架	Bracket, rear brake	2	pcs	
11	P-00-011	后碟刹	Rear brake comp	1	set	
12	P-00-012	链条调节器挡板	Block, chain adjustor	1	pcs	
13	P-00-013	链条调节器挡板	Block, chain adjustor	1	pcs	
14	P-00-014	左防尘盖	Dust proof cap	1	pcs	
15	P-00-015	右防尘盖	Dust proof cap	1	pcs	
16	P-00-016	后制动踏板	Rear brake pedal	1	pcs	
17	P-00-017	后刹车回位弹簧	Spring, rear brake pedal	1	pcs	
18	P-00-009	开口销ϕ3×35	Cotter pin ϕ3×35	1	pcs	
19	P-00-010	平垫ϕ17×ϕ23	Flat washer ϕ17×ϕ23	2	pcs	
20	P-00-011	油管夹	Circlip, brake hose	1	set	
21	P-00-012	螺栓	Bolt	1	pcs	
22	P-00-013	螺栓	Bolt	1	pcs	
23	P-00-014	油管夹	Circlip, brake hose	1	pcs	
24	P-00-015	螺栓	Bolt	1	pcs	
25	P-00-016	螺母	Nut	1	pcs	
26	P-00-017	六角带盘螺栓M6×16	Hex bolt M6x16	1	pcs	
27	P-00-012	加大平垫ϕ6×25	Flat washer ϕ6x25	1	pcs	
28	P-00-013	加大平垫ϕ6×18	Flat washer ϕ6×18	2	pcs	
29	P-00-014	六角带盘螺栓M6×20	Hex bolt M6x20	1	pcs	
30	P-00-015	加大平垫ϕ6×18	Flat washer ϕ6×18	2	pcs	

31	P-00-016	六角带盘螺栓M6×12	Hex bolt M6x12	2	pcs	

Gas tank						
No	Code	Chinese	English	Qty	Unit	Remark
1	Y-01-001	油箱	Gas tank	1	pcs	
2	Y-01-002	油泵	Fuel pump	1	pcs	
3	Y-01-003	燃油传感器	Fuel floater sensor	1	pcs	
4	Y-01-004	带盘防滑螺母M6	Bolt M6	4	pcs	
5	Y-01-005	油箱锁盖	Gas cap	1	pcs	
6	Y-01-006	油箱锁盖与油箱紧固螺栓	Bolt,gas tank and gas cap	3	pcs	
7	Y-01-007	螺栓	Bolt	1	pcs	
8	Y-01-008	六角螺栓M5×20	Hex bolt M5x20	4	pcs	
9	Y-01-009	平垫ϕ5	Flat washer ϕ5	4	pcs	
10	Y-01-010	油位传感器与油箱弹簧垫	Spring washer,gas tank and fuel floater sensor	4	pcs	
11	Y-01-011	油箱与车架连接胶垫	Rubber washer, gas tank and frame	1	pcs	
12	Y-01-012	翻边衬套ϕ8×ϕ25×16	Bushing ϕ8×ϕ25×16	1	pcs	
13	Y-01-013	六角带盘螺栓M8×30	Hex bolt M5x30	1	pcs	
14	Y-01-014	油箱与车架固定胶塞	Plug, gas tank and frame	2	pcs	
15	Y-01-015	油箱与左右覆盖件连接工字胶	Rubber, plastic covers and gas tank	2	pcs	
16	Y-01-016	油管	Fuel line	1	pcs	
17	Y-01-017	喇叭	Horn	1	pcs	

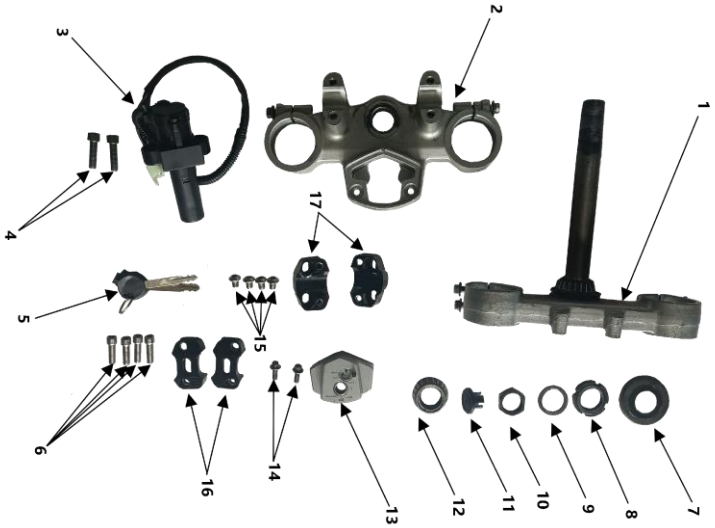

Steering stem and lock						
No	Code	Chinese	English	Qty	Unit	Remark
1	Y-02-001	方向柱总成	Steering stem	1	pcs	
2	Y-02-002	方向柱上联板	Upper plate, steering stem	1	pcs	
3	Y-02-003	电门锁	Key switch	1	pcs	
4	Y-02-004	内六角圆柱头螺栓M8×20	Hex bolt M8x20	2	pcs	
5	Y-02-005	钥匙	Key	2	pcs	
6	Y-02-006	卡子安装螺栓M8×65mm	Bolt M8x65mm, handle bar clamp	4	pcs	
7	Y-02-007	上防尘盖	Dust proof cap(upper)	2	pcs	
8	Y-02-008	调节螺母	Adjustable nut	2	pcs	
9	Y-02-009	下垫片	Lower washer	1	pcs	
10	Y-02-010	紧锁螺母	Locked nut	1	pcs	
11	Y-02-011	赌头	Block	1	pcs	
12	Y-02-012	滚针轴承内座圈	Ring, needle bearing	1	pcs	
13	Y-02-013	防盗锁盖	Cap,anti-theft lock	1	pcs	
14	Y-02-014	六角带盘螺栓M6×12	Hex bolt M6x12	1	pcs	
15	Y-02-015	内六角圆柱头螺栓M8×20	Hex bolt M8x20	2	pcs	
16	Y-02-016	手把管卡子	Circlip, handle bar	2	pcs	
17	Y-02-017	手把管卡座	Clamp, handle bar	2	pcs	

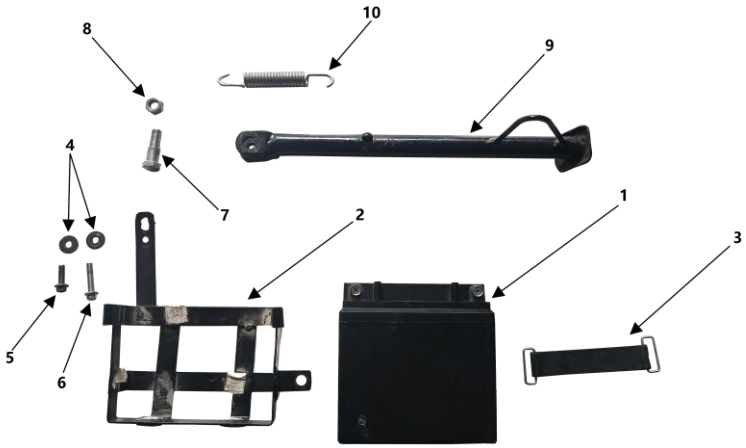

Battery, Bettery box						
No	Code	Chinese	English	Qty	Unit	Remark
1	S-01-001	蓄电池（电瓶）	Battery	1	pcs	
2	S-01-002	电瓶盒（蓄电池支架）	Battery box	1	pcs	
3	S-01-003	电瓶绑带	Rubber strip, battery	1	pcs	
4	S-01-004	大平垫ϕ6×Φ25	Flat wash ϕ6×Φ25	2	pcs	
5	S-01-005	六角带盘螺栓M6×12	Hex bolt M6x12	1	pcs	
6	S-01-006	六角带盘螺栓M6×20	Hex bolt M6x20	1	pcs	
7	S-01-007	台阶螺栓	Bolt	1	pcs	
8	S-01-008	六角螺母	Hex nut	1	pcs	
9	S-01-009	侧支架	Kick stand	1	pcs	
10	S-01-010	侧支架簧	Spring, kick stand	1	pcs	

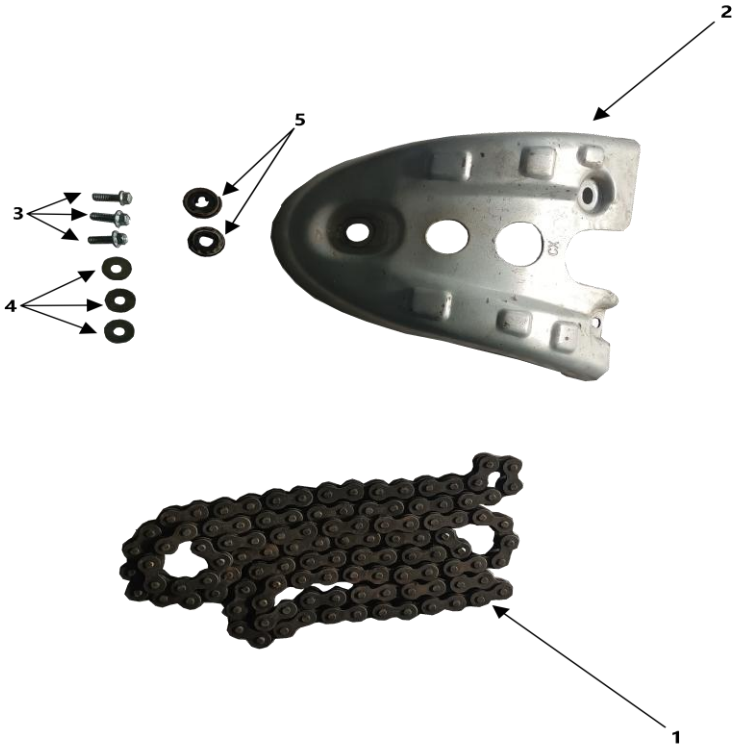

Chain,engine bottom cover						
No	Code	Chinese	English	Qty	Unit	Remark
1	L-03-001	链条	Chain	1	pcs	
2	L-03-002	发动机护罩	Engine bottom cover	1	pcs	
3	L-03-003	六角带盘螺栓M6×16	Hex bolt M6x16	3	pcs	
4	L-03-004	加大平垫ϕ6×18	Flat washer ϕ6×18	3	pcs	
5	L-03-005	工字胶	Rubber ring	2	pcs	

Seat						
No	Code	Chinese	English	Qty	Unit	Remark
1	Z-01-001	座垫总成	Seat	1	pcs	
2	Z-01-002	六角带盘螺栓M6×20	Hex blot M6x20	2	pcs	
3	Z-01-003	加大平垫ϕ6×25	Flat washer ϕ6×25	2	pcs	

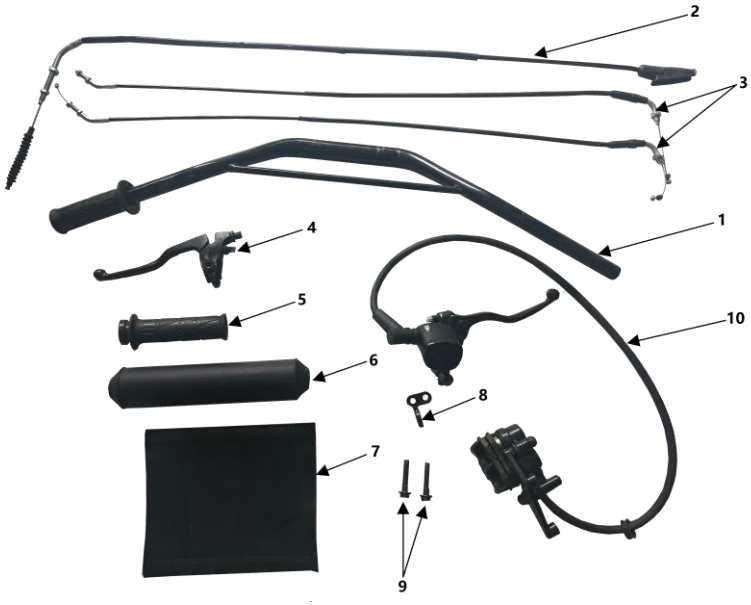

Handle bar						
No	Code	Chinese	English	Qty	Unit	Remark
1	S-02-001	手把管	Handle bar	1	pcs	
2	S-02-002	离合拉索	Clutch cable	1	pcs	
3	S-02-003	油门拉索	Throttle cable	2	pcs	
4	S-02-004	离合手柄	Clutch lever	1	pcs	
5	S-02-005	右手把胶（加油器）	Right grip with accelerator	1	pcs	
6	S-02-006	手把管装饰头	Decor, handle bar	1	pcs	
7	S-02-007	手把管装饰罩	Decor cap, handle bar	1	pcs	
8	S-02-008	线夹	Clamp, cable	1	pcs	
9	S-02-009	螺栓	Bolt	2	pcs	
10	S-02-010	前碟刹总成	Front brake comp	1	set	

Headlight, headlight cover						
No	Code	Chinese	English	Qty	Unit	Remark
1	D-01-001	前大灯罩	Headlight cover	1	pcs	
2	D-01-002	前大灯总成	Headlight comp	1	pcs	
3	D-01-003	挡风玻璃支架	Bracket, wind shield	1	set	
4	D-01-004	挡风玻璃	Wind shield	1	pcs	
5	D-01-005	灯壳左装饰件	L decor, headlight glass	2	pcs	
6	D-01-006	灯壳右装饰件	R decor, headlight glass	2	pcs	
7	D-01-007	加大平垫ϕ6×18	Flat washer ϕ6×18	3	pcs	
8	D-01-008	锥度内六角大扁头M6×40	Flat head, hex bolt M6x40	3	pcs	
9	D-01-009	工字胶	Rubber ring	4	pcs	
10	D-01-010	平垫	Flat washer	4	pcs	
11	D-01-011	锥度内六角大扁头M6×16	Flate head, hex screw M6x16	4	pcs	

12	D-01-012	自攻螺钉ST 4.2×16	Taped screw ST4.2x16	6	pcs	
13	D-01-013	螺母夹	Clamp, nut	2	pcs	
14	D-01-014	工字胶	Rubber ring	1	pcs	

Front fender						
No	Code	Chinese	English	Qty	Unit	Remark
1	D-03-001	前挡泥板	Front fender	1	pcs	
2	D-03-002	螺母夹	Clamp, nut	2	pcs	
3	D-03-003	胶平垫	Flat rubber washer	4	pcs	
4	D-03-004	平垫圈	Flat washer	4	pcs	
5	D-03-005	螺栓	Bolt	4	pcs	
6	D-03-006	带盘防滑螺母M6	Nut M6	2	pcs	
7	D-03-007	前侧光片	Front reflector	2	pcs	

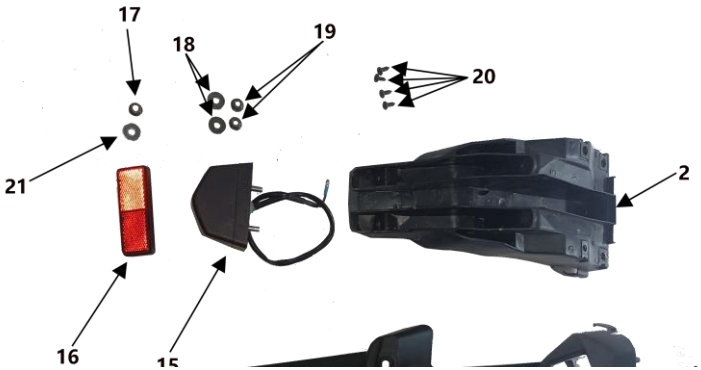

Rear fender						
No	Code	Chinese	English	Qty	Unit	Remark
1	D-04-001	后挡泥板	Rear fender	1	pcs	
2	D-04-002	后挡泥内板	Inner plate, rear fender	1	pcs	
3	D-04-003	尾灯	Taillight	1	pcs	
4	D-04-004	自攻螺钉ST 4.2×16	Taped screw ST 4.2x16	3	pcs	
5	D-04-005	带盘防滑螺母M6	Nut M6	2	pcs	
6	D-04-006	加大平垫ϕ6×18	Flatϕ6×18	4	pcs	
7	D-04-007	六角带盘螺栓M6×20	Hex bolt M6x20	2	pcs	

8	D-04-008	带盘防滑螺母M6	Nut M6	2	pcs	
9	D-04-009	反射器	Reflector	2	pcs	
10	D-04-010	后排照支架	Bracke, license plate	1	pcs	
11	D-04-011	花瓣工字胶	Rubber ring	4	pcs	
12	D-04-012	焊接螺母夹M6×长19×17宽	Clamp M6x19x17	4	pcs	
13	D-04-013	六角带盘螺栓M6×25	Hex bolt M6x25	4	pcs	
14	D-04-014	带盘防滑螺母M6	Nut M6	4	pcs	
15	D-04-015	牌照灯	License plate light	1	pcs	
16	D-04-016	后侧光片	Rear reflector	1	pcs	
17	D-04-017	带盘防滑螺母M6	Nut M6	1	pcs	
18	D-04-018	加大平垫ϕ6×18	Flat washer ϕ6×18	2	pcs	
19	D-04-019	带盘防滑螺母M6	Nut M6	2	pcs	
20	D-04-020	自攻螺钉ST 4.2×16	Taped screw ST 4.2x16	4	pcs	
21	D-04-021	加大平垫ϕ6×18	Flat washer ϕ6×18	2	pcs	

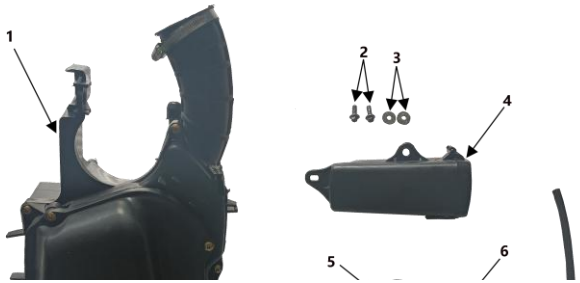

Air filter

No	Code	Chinese	English	Qty	Unit	Remark
1	K-00-001	空滤器	Air filter	1	pcs	
2	K-00-002	锥度内六角大扁头M6×16	Flat head bolt M6x16	2	pcs	
3	K-00-003	加大平垫ϕ6×18	Flat washer ϕ6×18	2	pcs	
4	K-00-004	工具盒	Tool kit box	1	pcs	
5	K-00-005	空滤器连接抱箍	Clamp, air filter	1	pcs	

6	K-00-006	六角带盘螺栓M6×16	Hex bolt M6x16	1	pcs	
7	K-00-007	碳罐组件	Carbon canister assy	1	set	

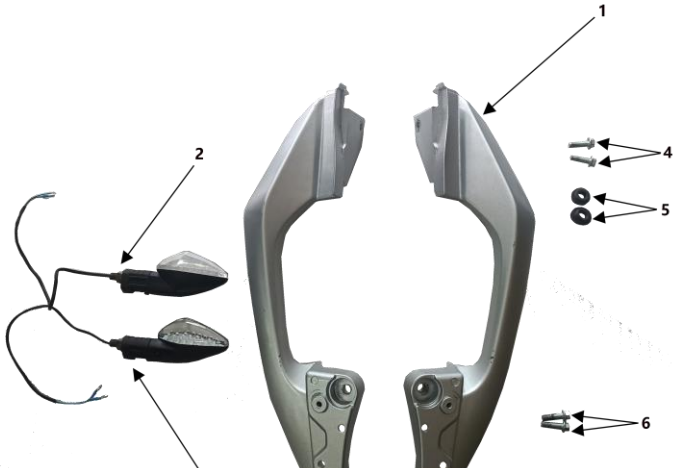

Rear handle bar, rear turn signals						
No	Code	Chinese	English	Qty	Unit	Remark
1	D-05-001	后扶手	Rear handle bar	1	pcs	
2	D-05-002	左后转向灯	L rear turn signal	1	pcs	
3	D-05-003	右后转向灯	R rear turn signal	1	pcs	

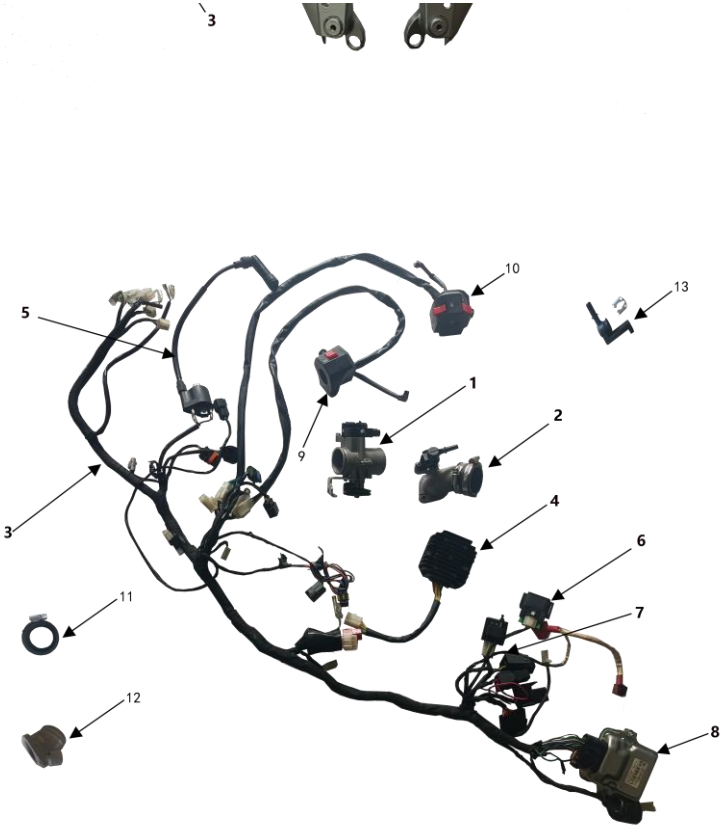

4	D-05-004	螺栓M6	**Bolt M6**	**2**	pcs	
5	D-05-005	橡胶件	Rubber ring	2	pcs	
6	D-05-006	螺栓M6	Bolt M6	2	pcs	

Wire harness, electric parts

No	Code	Chinese	English	Qty	Unit	Remark
1	Z-02-001	节气门阀体	Throttle body comp	1	pcs	
2	Z-02-002	进气管接头	Air intake head	1	pcs	
3	Z-02-003	主线缆	Wire harness	1	set	
4	Z-02-004	调压器	Regulator	1	pcs	
5	Z-02-005	高压包	Ignition coil	1	pcs	
6	Z-02-006	继电器	Starting relay	1	pcs	
7	Z-02-007	闪光器	Flasher	1	pcs	
8	Z-02-008	ECU	ECU	1	pcs	
9	Z-02-009	右闸把	R handle switch	1	pcs	
10	Z-02-010	左闸把	L handle switch	1	pcs	
11	Z-02-011	进气管接头	Air intake head	1	pcs	
12	Z-02-012	进气管	Air intake	1	pcs	
13	Z-02-013	喷油器帽	Fuel injector cap	1	pcs	

Rear body plastic

No	Code	Chinese	English	Qty	Unit	Remark

1	H-00-001	尾盖	Rear body plastic	1	pcs	
2	H-00-002	维修盖	Cap, rear body plastic	1	pcs	
3	H-00-003	蝴蝶胶	Rubber, rear body plastic	1	pcs	
4	H-00-004	座垫支架	Bracket, seat	1	pcs	
5	H-00-005	六角带盘螺栓M6×16	Hex bolt M6x16	2	pcs	
6	H-00-006	十字大扁头	Flat head screw	2	pcs	
7	H-00-007	螺母M6	Nut M6	2	pcs	
8	H-00-008	加大平垫ϕ6×18	Flatϕ6×18	4	pcs	
9	H-00-009	六角螺栓M6×10	Bolt M6x10	4	pcs	

L/R body,gas tank

No	Code	Chinese	English	Qty	Unit	Remark
1	Y-03-001	油箱右护板	R body, gas tank	1	pcs	
2	Y-03-002	油箱左护板	L body, gas tank	1	件	
3	Y-03-003	油箱右后护板	R rear body, gas tank	1	件	
4	Y-03-004	油箱左后护板	L rear body, gas tank	1	件	
5	Y-03-005	锥度内六角大扁头M6×20	Hex flat head M6x20	2	件	
6	Y-03-006	加大平垫ϕ6×18	Flat washer ϕ6×18	2	件	
7	Y-03-007	自攻螺钉ST 4.2×16	Taped screw ST 4.2x16	6	件	
8	Y-03-008	橡胶件	Rubber ring	6	件	

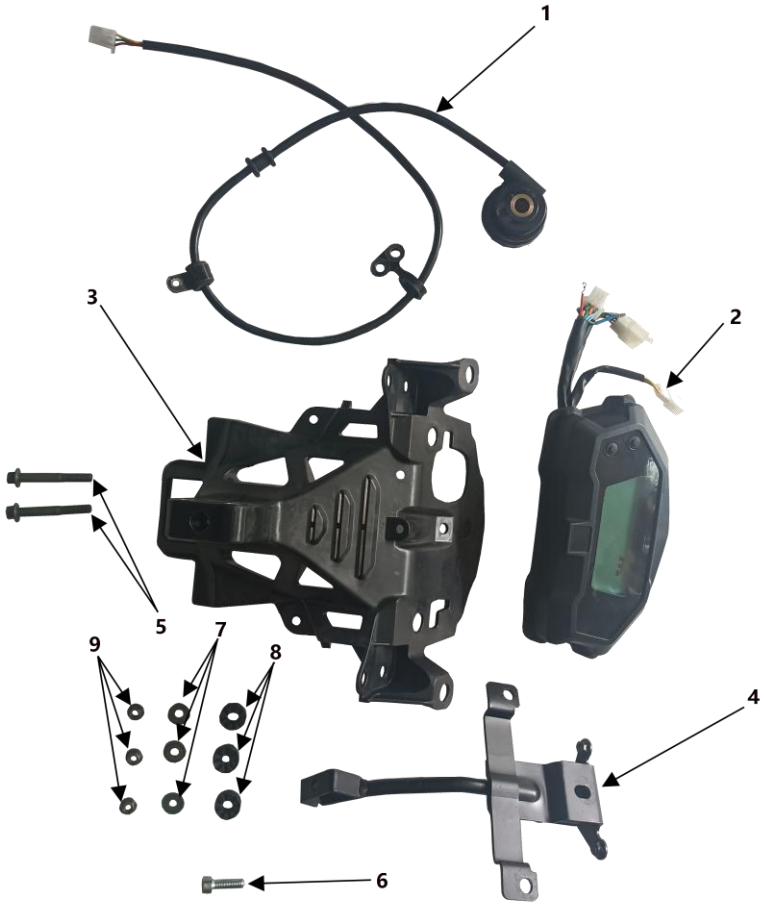

Dash,Rear glass/headlight shell						
No	Code	Chinese	English	Qty	Unit	Remark
1	D-06-001	计速器	Speed sensor	1	pcs	
2	D-06-002	仪表	Dash	1	pcs	
3	D-06-003	灯壳后罩	Rear glass, headlight shell	1	pcs	
4	D-06-004	挡风玻璃内支架及仪表支架总成	Dash bracket, wind shield inner bracket	1	pcs	
5	D-06-005	六角带盘螺栓M8×40	Hex bolt M8x40	2	pcs	
6	D-06-006	六角螺栓M8×35	Hex bolt M8x35	1	pcs	
7	D-06-007	加大平垫ϕ6×18	Flat washer ϕ6×18	3	pcs	
8	D-06-008	花瓣工字胶	Rubber ring	3	pcs	
9	D-06-009	带盘防滑螺母M6	Nut M6	3	pcs	

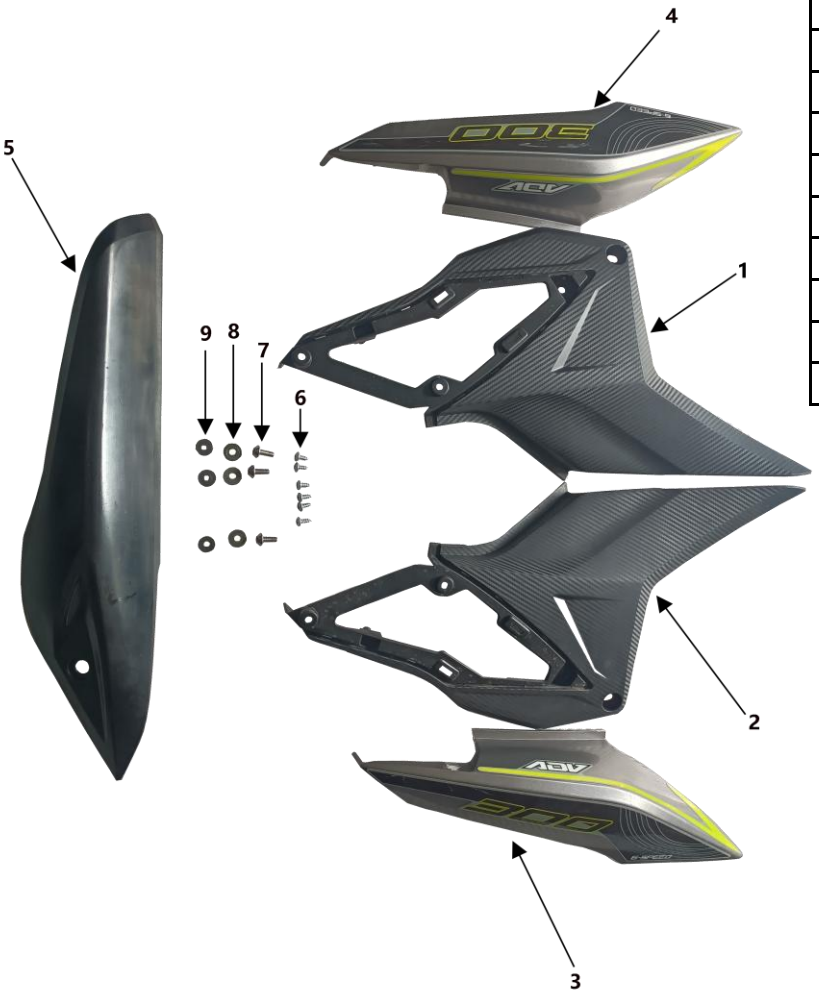

L/R body covers						
No	Code	Chinese	English	Qty	Unit	Remark
1	G-00-001	左侧盖	L side cover	1	pcs	
2	G-00-002	右侧盖	R side cover	1	pcs	
3	G-00-003	左车体	L side body	1	pcs	
4	G-00-004	右车体	R side body	1	pcs	
5	G-00-005	消声器护罩	Cover, muffler	1	pcs	
6	G-00-006	自攻螺钉ST 4.2×12	Taped screw ST 4.2x12	6	pcs	
7	G-00-007	锥度内六角大扁头M6×20	Hex flat head bolt M6x20	3	pcs	
8	G-00-008	加大平垫ϕ5×16	Flat washer ϕ5×16	3	pcs	
9	G-00-009	翻边衬套ϕ6×ϕ18×10	Bushing ϕ6×ϕ18×10	3	pcs	

Front fender, front turn signals						
No	Code	Chinese	English	Qty	Unit	Remark
1	S-03-001	前挡泥上	Upper, front fender	1	pcs	
2	S-03-002	仪表装饰件	Decor, dash	1	pcs	
3	S-03-003	右前转向灯	R, front turn signal	1	pcs	
4	S-03-004	左前转向灯	L, front turn signal	1	pcs	
5	S-03-005	橡胶件	Rubber ring	4	pcs	
6	S-03-006	锥度内六角大扁头M6×20	Hex flat head M6x20	2	pcs	
7	S-03-007	加大平垫ϕ6×18	Flat washer ϕ6×18	4	pcs	
8	S-03-008	十字带垫M5×12	Screw M5x12	4	pcs	
9	S-03-009	螺母夹	Clamp, nut	2	pcs	

L/R handle bar cover						
No	Code	Chinese	English	Qty	Unit	Remark
1	S-00-001	左手把护罩	L handle bar cover	1	pcs	
2	S-00-002	右手把护罩	R handle bar cover	1	pcs	

14,

15,

1,

2,

3,