RPS BLADE 250 PARTS CATALOGUE

Frame						
No	Code	Chinese	English	Qty	Unit	Remark
1	C-00-001	车架	Frame	1	pcs	
2	C-00-002	前悬挂	Front suspension	1	pcs	
3	C-00-003	上悬挂	Upper suspension	1	pcs	
4	C-00-004	导链轮支架	Bracket, Chain roller	1	pcs	
5	C-00-005	轴承座圈	Race, bearing	2	pcs	
6	C-00-006	导链轮	Chain roller	1	pcs	
7	C-00-007	六角带盘螺栓M8×20	Hex disc bolt M8x20	4	pcs	
8	C-00-008	加大平垫Φ8×Φ24	Large flat washer Φ8×Φ24	4	pcs	
9	C-00-009	弹垫φ8	Sprint washer Φ8	4	pcs	
10	C-00-010	平垫Φ10	Flat washer Φ10	2	pcs	
11	C-00-011	开口销Φ2×30	Cotter pin Φ2×30	1	pcs	

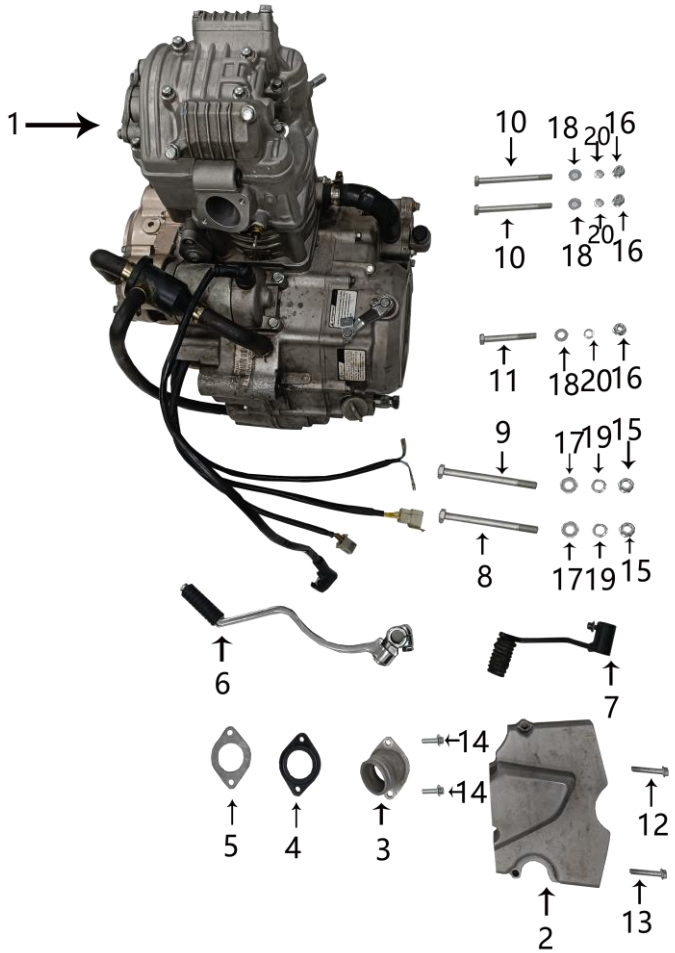

Engine Complete						
No	Code	Chinese	English	Qty	Unit	Remark
1	F-00-001	发动机	Engine complete	1	unit	
2	F-00-002	尾盖	Engine rear cover	1	pcs	
3	F-00-003	进气管	Air intake	1	pcs	
4	F-00-004	进气管胶木垫	Rubber/wood washer,air intake	1	pcs	
5	F-00-005	进气管胶纸垫	Rubber/paper washer,air intake	1	pcs	
6	F-00-006	启动杆	Kick starter	1	pcs	
7	F-00-007	变档臂	Gearshifter	1	pcs	
8	F-00-008	六角带盘螺栓M10×120	Hex disc bolt M10×120	1	pcs	
9	F-00-009	六角带盘螺栓M10×115	Hex disc bolt M10×115	1	pcs	
10	F-00-010	六角带盘螺栓M8×95	Hex disc bolt M8x95	2	pcs	
11	F-00-011	六角带盘螺栓M8×65	Hex disc bolt M8x65	1	pcs	
12	F-00-012	小盘螺栓M6×32	Small sized disc bolt M6x32	1	pcs	
13	F-00-013	小盘螺栓M6×35	Small sized disc bolt M6x35	1	pcs	
14	F-00-014	小盘螺栓M6×16	Small sized disc bolt M6x16	2	pcs	
15	F-00-015	自锁螺母M10×1.25	Self-locked nut M10x1.25	2	pcs	
16	F-00-016	自锁螺母M8×1.25	Self-locked nut M8x1.25	3	pcs	
17	F-00-017	平垫Φ10	Flat washerΦ10	2	pcs	
18	F-00-018	平垫Φ8	Flat washerΦ8	3	pcs	
19	F-00-019	弹垫ϕ10	Spring washerΦ10	2	pcs	
20	F-00-020	弹垫ϕ8	Spring washerΦ8	3	pcs	

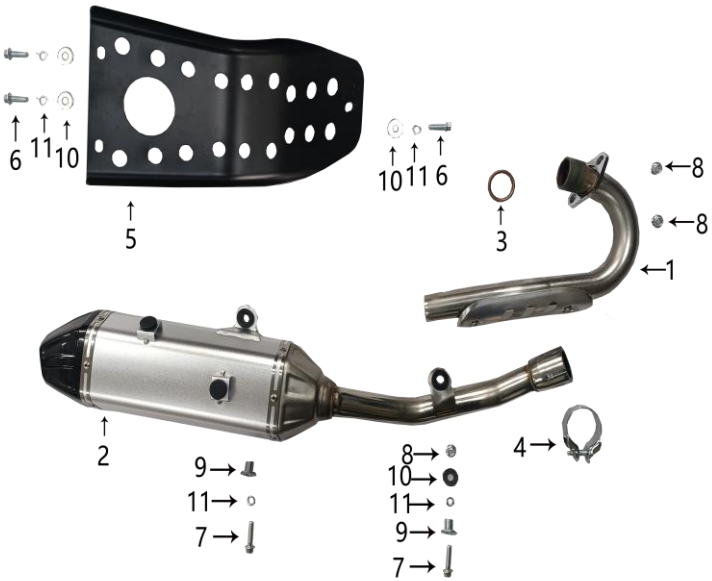

Muffler						
No	Code	Chinese	English	Qty	Unit	Remark
1	X-00-001	消声器前段	Front part,muffler	1	pcs	
2	X-00-002	消声器筒体	Muffler pipe	1	pcs	
3	X-00-003	消声器垫	Gasket,muffler	1	pcs	
4	X-00-004	消声器前段与后段连接抱箍	Clamp,muffler	1	pcs	
5	X-00-005	发动机护板	Engine protecting plate	1	pcs	
6	X-00-006	六角带盘螺栓M8×20	Hex disc bolt M8x20	3	pcs	
7	X-00-007	六角带盘螺栓M8×30	Hex disc bolt M8x30	2	pcs	
8	X-00-008	自锁螺母M8×1.25	Self-locked nut M8x1.25	3	pcs	
9	X-00-009	翻边衬套Φ8.5×12.5-（Φ11.5×10.5+Φ24.5×2）	BushingΦ8.5×12.5-（Φ11.5×10.5+Φ24.5×2）	2	pcs	
10	X-00-010	加大平垫Φ8×Φ24	Large flat washer Φ8×Φ24	4	pcs	
11	X-00-011	弹垫φ8	Spring washer Φ8	5	pcs	

Front/Rear Tire Complete						
No	Code	Chinese	English	Qty	Unit	Remark
1	L-00-001	前轮外胎	Front tire	1	pcs	
2	L-00-002	前轮内胎	Front tube	1	pcs	
3	L-00-003	后轮外胎	Rear tire	1	pcs	
4	L-00-004	后轮内胎	Rear tube	1	pcs	
5	L-00-005	前后内胎垫带	Belt, front and rear tube	1	pcs	

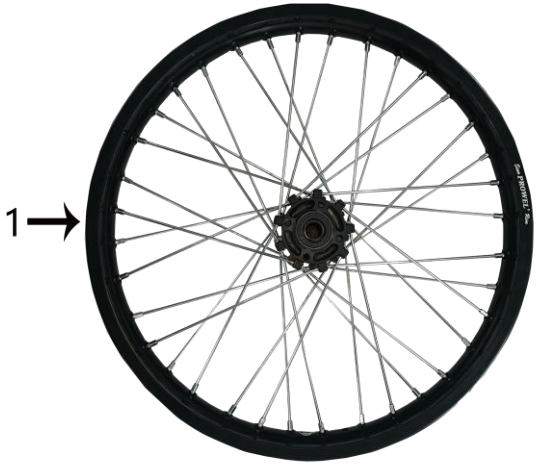

Front/Rear Rims						
No	Code	Chinese	English	Qty	Unit	Remark
1	L-01-001	前轮毂	Front rim complete	1	set	
2	L-01-002	后轮毂	Rear rim complete	1	set	

Front Shock						
No	Code	Chinese	English	Qty	Unit	Remark
1	J-00-001	前右减震器	R Front shock	1	pcs	
2	J-00-002	前左减震器	L Front shock	1	pcs	
3	J-00-003	前右减震护罩	R Cover, Front shock	1	pcs	
4	J-00-004	前左减震护罩	L Cover, Front shock	1	pcs	
5	J-00-005	左尼龙抱箍	Nylon clamp	1	pcs	
6	J-00-006	前轮轴	Front axle	1	pcs	
7	J-00-007	前轮左右衬套	L/R bush, front wheel	2	pcs	
8	J-00-008	带盘螺栓M14×1.5×15mm	Disc bolt M14x1.5x15mm	1	pcs	
9	J-00-009	内六角大扁头螺栓M6×10	Inner hex flat head bolt M6x10	6	pcs	
10	J-00-010	内六角杯头螺栓M5×16	Inner hex disc head bolt M5x16	2	pcs	

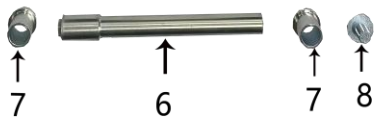

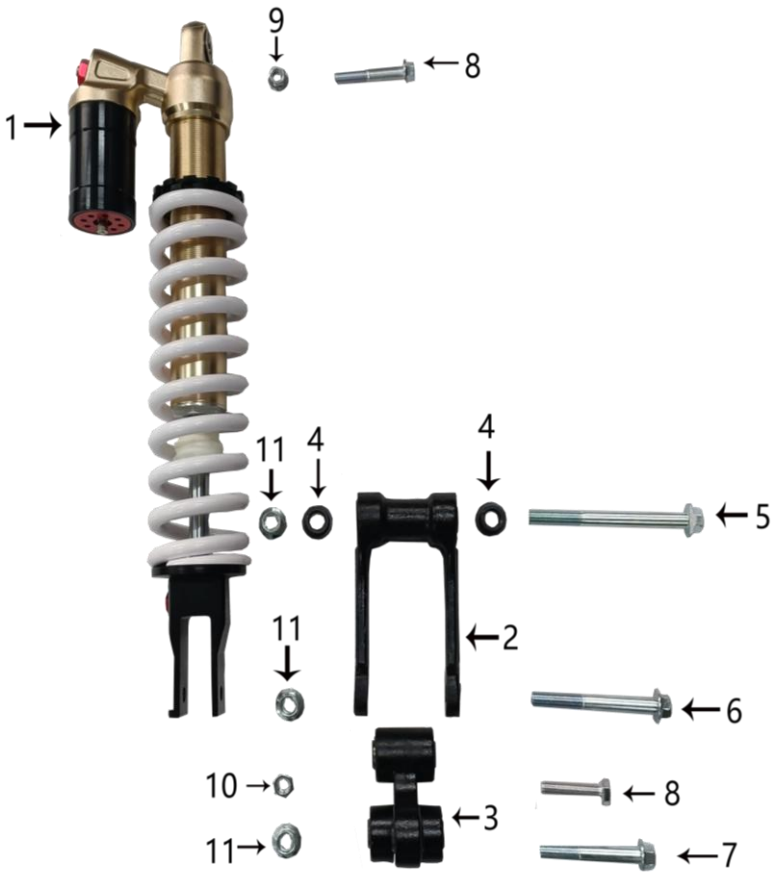

Rear Shock Complete						
No	Code	Chinese	English	Qty	Unit	Remark
1	J-01-001	后减震器	Rear shock	1	set	
2	J-01-002	前摇架	Front swing arm	1	pcs	
3	J-01-003	后摇架	Rear swing arm	1	pcs	
4	J-01-004	摇架翻边衬套：ϕ12×12（ϕ12×ϕ20×8+ϕ12×ϕ30×4）	Bush,φ12×12（φ12×φ20×8+φ12×φ30×4), swing arm	2	pcs	
5	J-01-005	六角带盘螺栓M12×125	Bolt,M12x125	1	pcs	
6	J-01-006	六角带盘螺栓M12×95	Bolt,M12x95	1	pcs	
7	J-01-007	六角带盘螺栓M12×75	Bolt, M12x75	1	pcs	
8	J-01-008	六角螺栓M10×45	Bolt,M10x45	1	pcs	
9	J-01-009	自锁螺母M10×1.25	Self-lock nut, M10x1.25	3	pcs	
10	J-01-010	六角普通螺母M10	Nut M10	1	pcs	
11	J-01-011	自锁螺母M12×1.25	Self-lock nut, M12x1.25	3	pcs	

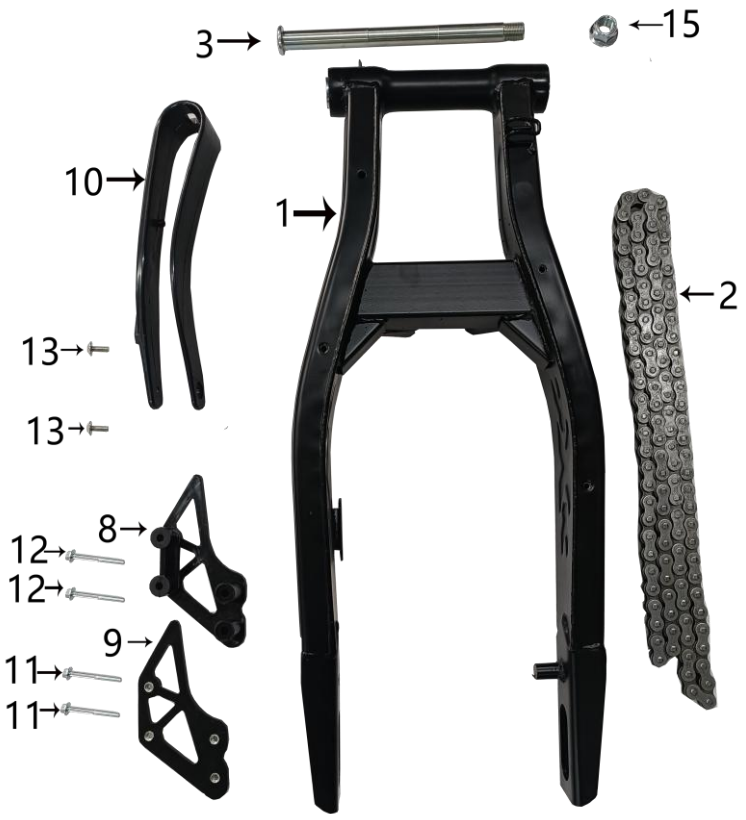

Rear Fork Complete						
No	Code	Chinese	English	Qty	Unit	Remark
1	P-00-001	平叉	Rear fork	1	pcs	
2	P-00-002	链条	Chain	1	pcs	
3	P-00-003	平叉轴	Axle, rear fork	1	pcs	
4	P-00-004	后轮轴	Rear axle	1	pcs	
5	P-00-005	后轮左衬套	L bush, rear wheel	1	pcs	
6	P-00-006	后轮右衬套	R bush, rear wheel	1	pcs	
7	P-00-007	链轮调节器	Chain adjustor, Chain	2	pcs	
8	P-00-008	左链条导向盒	L bracket, Chain guide	1	pcs	
9	P-00-009	右链条导向盒	R bracket, Chain guide	1	pcs	
10	P-00-010	链条护卡	Protect, Chain	1	pcs	
11	P-00-011	六角带盘螺栓M6×50	Hex disc bolt M6x50	2	pcs	
12	P-00-012	六角带盘螺栓M6×45	Hex disc bolt M6x45	2	pcs	
13	P-00-013	内六角大扁头螺栓M6×16	Inner hex flat head bolt M6x16	2	pcs	
14	P-00-014	带盘螺母M25×1.5×12	Disc nut M25x1.5x12	2	pcs	
15	P-00-015	自锁螺母M16×1.25	Self-locked nut M16x1.25	1	pcs	

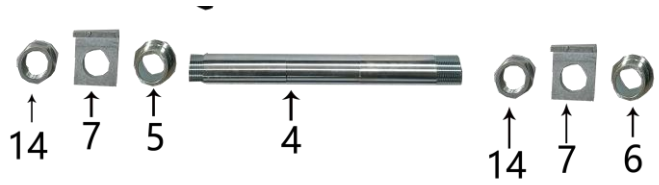

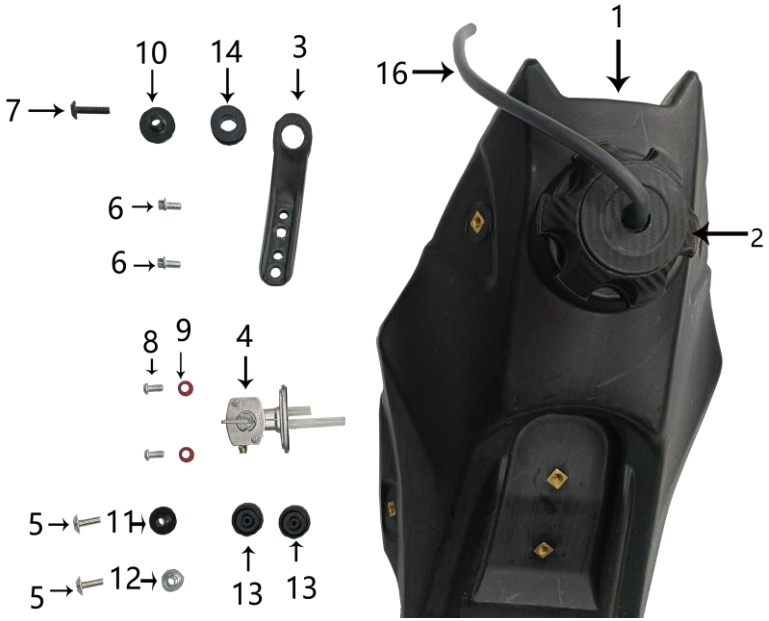

Gas Tank Complete						
No	Code	Chinese	English	Qty	Unit	Remark
1	Y-00-001	油箱	Gas tank	1	pcs	
2	Y-00-002	油箱盖	Gas cap	1	pcs	
3	Y-00-003	油箱安装支耳	Lug,gas tank	1	pcs	
4	Y-00-004	燃油开关	Fuel petcock	1	pcs	
5	Y-00-005	内六角大扁头螺栓M6×16	Inner hex flat head bolt M6x16	2	pcs	
6	Y-00-006	六角带盘螺栓M6×10	Hex disc bolt M6x10	2	pcs	
7	Y-00-007	平垫Φ6	Flat washer Φ6	1	pcs	
8	Y-00-008	十字圆头螺栓M6×16mm	Philips round head bolt M6x16mm	2	pcs	
9	Y-00-009	密封胶平垫Φ6	Flat washer Φ6	2	pcs	
10	Y-00-010	翻边衬套ϕ8×ϕ30×10.5	Bushing φ 8×φ 30×10.5	1	pcs	
11	Y-00-011	翻边衬套ϕ6.5×ϕ22×9	Bushing φ 6.5×φ 22×9	1	pcs	
12	Y-00-012	翻边衬套Φ7×Φ18×9.5	Bushing Φ 7×Φ 18×9.5	1	pcs	
13	Y-00-013	油箱胶垫	Rubber,gas tank	2	pcs	
14	Y-00-014	油箱前安装支耳工字胶	Rubber,F lug, gas tank	1	pcs	
15	Y-00-015	油箱后橡胶拉带	Rubber strap(rear),gas tank	1	pcs	
16	Y-00-016	油箱通气管(透明通气管)	Gas cap tube	1	pcs	

Steering Stem						
No	Code	Chinese	English	Qty	Unit	Remark
1	F-01-001	方向柱	Steering stem	1	pcs	
2	F-01-002	上联板	Upper connecting plate	1	pcs	
3	F-01-003	大灯支架	Bracket, headlight	1	pcs	
4	F-01-004	前挡泥板	Front fender	1	pcs	
5	F-01-005	前挡泥板	Front fender	1	set	
6	F-01-006	计时器	Speed sensor	1	set	
7	F-01-007	碟刹油管夹	Clip, disc brake line	1	pcs	
8	F-01-008	滚针轴承	Needle bearing	2	pcs	
9	F-01-009	防尘垫片	Dust proof washer	1	pcs	
10	F-01-010	调节螺母	Adjustable nut	1	pcs	
11	F-01-011	锁紧螺母	Locked nut	1	pcs	
12	F-01-012	立管堵头	Block	1	pcs	
13	F-01-013	轴承平垫	Flat washer,bearing	1	pcs	
14	F-01-014	十字圆头螺栓M4×16	Philips round head bolt M4x16	2	pcs	
15	F-01-015	六角带盘螺栓M6×20	Hex disc bolt M6x20	4	pcs	

6 ↑ 14 ↑ 14

16	F-01-016	六角带盘螺栓M6×16	Hex disc bolt M6x16	1	pcs	
17	F-01-017	内六角大扁头螺栓M6×16	Inner hex flat head bolt M6x16	2	pcs	
18	F-01-018	加大平垫Φ6×Φ18mm	Large flat washerΦ6×Φ18mm	6	pcs	
19	F-01-019	胶平垫Φ6×Φ16mm	Rubber flat washerΦ6×Φ16mm	6	pcs	

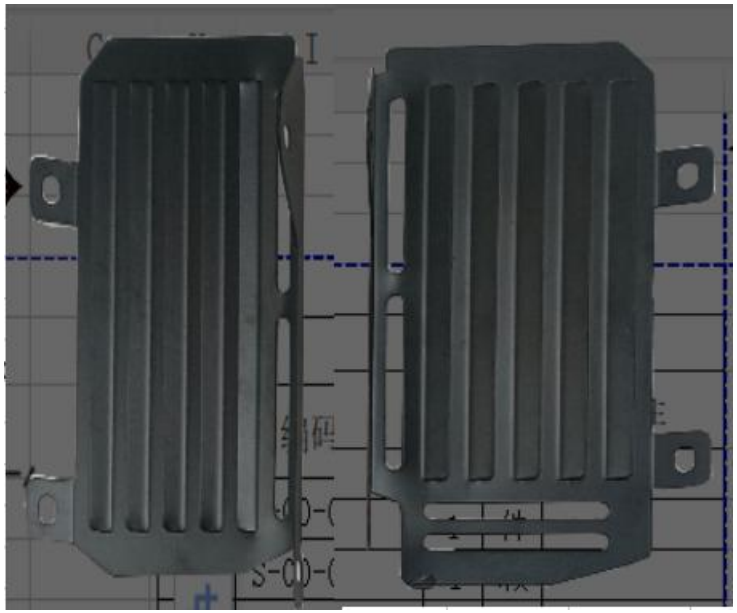

Water Cooling System						
No	Code	Chinese	English	Qty	Unit	Remark
1	S-00-003	左散热器导风罩	L ventilation hood	1	pcs	
2	S-00-004	右散热器导风罩	R ventilation hood	1	pcs	
3	S-00-009	六角带盘螺栓M6×25	Hex disc bolt M6x25	4	pcs	
4	S-00-010	内六角大扁头螺栓M6×16	Inner hex flat head bolt M6x16	2	pcs	
5	S-00-011	加大平垫Φ6×Φ18	Large flat washer Φ6×Φ18	2	pcs	
6	S-00-012	焊接螺母卡子M6	Clip M6,Nut	2	pcs	
7	S-00-013	胶平垫Φ6×Φ18mm	Rubber flat washer Φ6×Φ18mm	3	pcs	

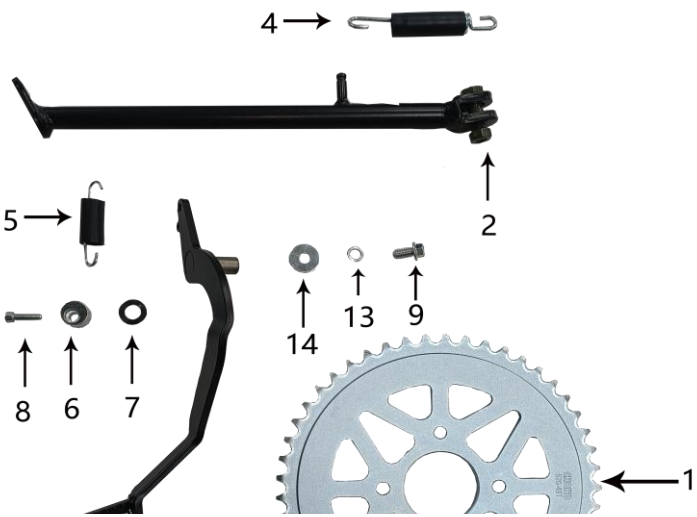

Rear Sprocket,Side Stand, Rear Brake Pedal						
No	Code	Chinese	English	Qty	Unit	Remark
1	L-02-001	链盘	Rear sprocket	1	pcs	
2	L-02-002	侧支架	Side stand	1	set	
3	L-02-003	后制动臂	Rear brake pedal	1	pcs	
4	L-02-004	侧支架簧	Spring,side stand	1	pcs	
5	L-02-005	制动臂回位簧	Spring,rear brake pedal	1	pcs	
6	L-02-006	制动臂限位衬套	Bushing,rear brake pedal	1	pcs	
7	L-02-007	波纹垫	Washer	1	pcs	
8	L-02-008	内六角杯头螺栓M5×20	Inner hex bolt M5x20	1	pcs	
9	L-02-009	六角带盘螺栓M8×16	Hex disc bolt M8x16	1	pcs	
10	L-02-010	六角螺栓M10×30×1.25	Hex bolt M10x30x1.25	4	pcs	
11	L-02-011	平垫Φ10	Flat washer Φ10	4	pcs	
12	L-02-012	弹垫φ 10	Spring washer Φ10	4	pcs	

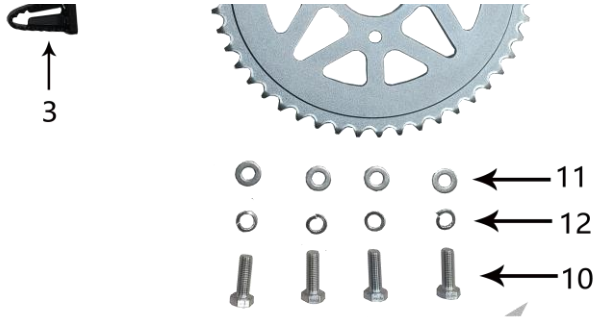

13	L-02-013	弹垫φ 8	Spring washer Φ8	1	pcs	
14	L-02-014	加大平垫Φ8×Φ24	Large flat washer Φ8xΦ24	1	pcs	

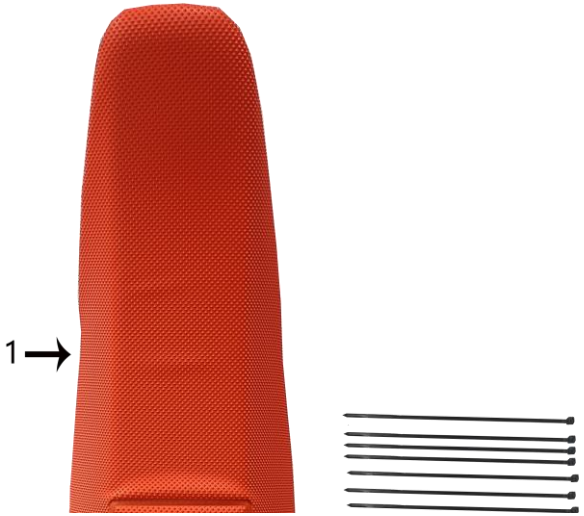

Seat Complete						
No	Code	Chinese	English	Qty	Unit	Remark
1	Z-00-001	座垫	Seat	1	pcs	
2	Z-00-002	六角带盘螺栓M8×20	Hex bolt M8x20	2	pcs	
3	Z-00-003	平垫Φ10	Flat washer Φ10	2	pcs	
4	Z-00-004	胶平垫Φ8×Φ20mm	Rubber flat washer Φ8×Φ20mm	2	pcs	
5	Z-00-005	扎带	Strap	9	pcs	

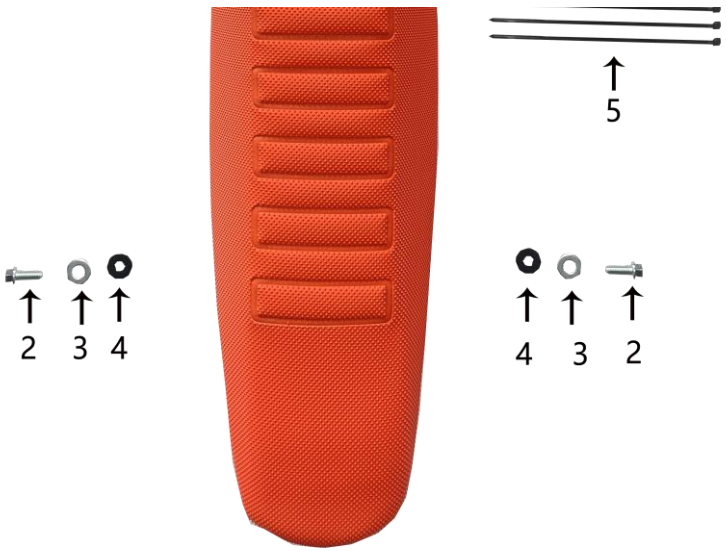

Handle Bar						
No	Code	Chinese	English	Qty	Unit	Remark
1	S-01-001	手把管	Handle bar	1	pcs	
2	S-01-002	右手把胶（加油器）	R grip (accelerator)	2	pcs	
3	S-01-003	左手把胶	L grip	1	pcs	
4	S-01-004	加油器座	Throttle housing	1	pcs	
5	S-01-005	左闸把开关	L handle switch complete	1	pcs	
6	S-01-006	右闸把开关	R handle switch complete	1	pcs	
7	S-01-007	离合手柄	Clutch lever	1	pcs	
8	S-01-008	离合开关线	Clutch switch wire	1	pcs	

9	S-01-009	离合拉索线	Clutch cable	1	pcs	
10	S-01-010	油门拉索	Throttle cable	1	pcs	

Headlight Complete						
No	Code	Chinese	English	Qty	Unit	Remark
1	D-00-001	前大灯罩	Headlight cover	1	pcs	
2	D-00-002	前大灯总成	Headlight complete	1	pcs	
3	D-00-003	防撞套外包皮	Plastic cover handle bar pad	1	pcs	
4	D-00-004	防撞套	Handle bar pad	1	pcs	
5	D-00-005	大灯罩碟刹油管卡子	Clip, headlight cover and brake hose	1	pcs	
6	D-00-006	内六角大扁头螺栓M6×16	Inner hex flat head bolt M6x16	2	pcs	

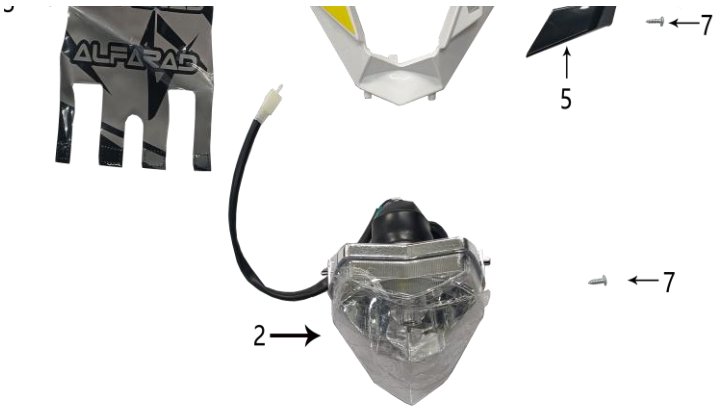

7	D-00-007	自攻钉ST4.2×16	Self-tapping screw ST4.2x16	1	pcs	
8	D-00-008	加大平垫Φ6×Φ18	Large flat washer Φ6×Φ18	2	pcs	
9	D-00-009	花瓣工字胶-2件	Rubber ring	2	pcs	

Front Disc Brake Complete						
No	Code	Chinese	English	Qty	Unit	Remark
1	D-01-001	前碟刹总成	Front disc brake complete	1	set	
2	D-01-002	前碟刹盘	Front brake disc	1	pcs	
3	D-01-003	后碟刹总成	Rear disc brake complete	1	set	
4	D-01-004	后碟刹盘	Rear brake disc	1	pcs	

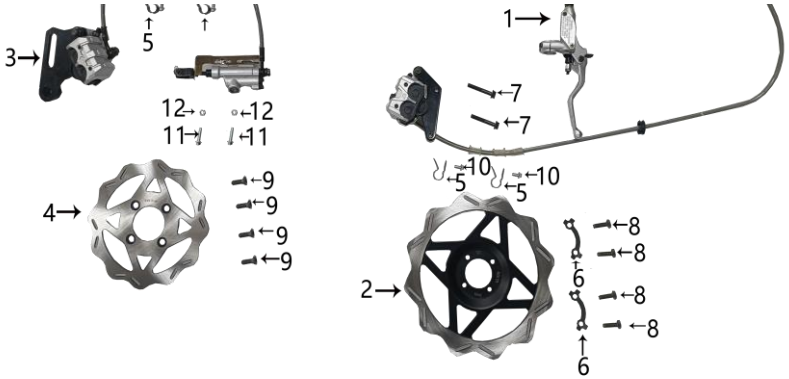

5	D-01-005	油管夹	Brake hose clamp	4	pcs	
6	D-01-006	碟刹盘锁片	Clip,brake disc	2	pcs	
7	D-01-007	带盘螺栓M8×48	Disc bolt M8x48	2	pcs	
8	D-01-008	六角螺栓M8×25	Hex bolt M8x25	4	pcs	
9	D-01-009	内六角台阶螺栓M8×3.5×25	Inner hex tapped bolt M8x3.5x25	4	pcs	

Front Foot Peg						
No	Code	Chinese	English	Qty	Unit	Remark
1	G-00-001	前左搁脚	L,front footrest	1	pcs	

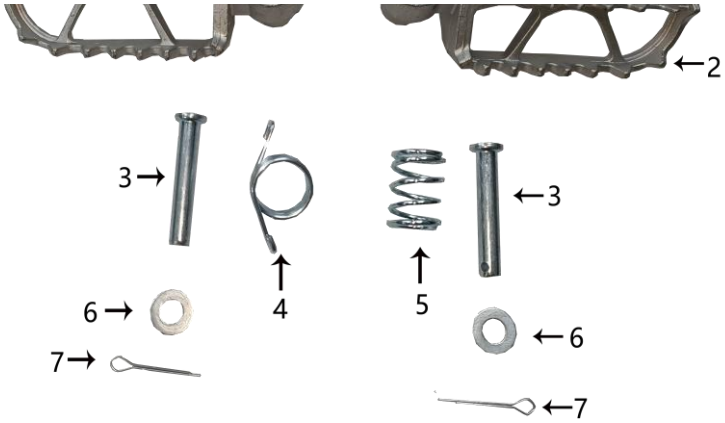

2	G-00-002	前右搁脚	R,front footrest	1	pcs	
3	G-00-003	销轴φ 8×50mm	Pin φ 8×50mm	2	pcs	
4	G-00-004	左回位簧（扭簧）	Spring,L front footrest	1	pcs	
5	G-00-005	右回位簧（圆柱型）	Spring,R front footrest	1	pcs	
6	G-00-006	平垫Φ8	Flat washer Φ8	2	pcs	
7	G-00-007	开口销Φ2×20	Cotter pin Φ2x20	2	pcs	

Rear Part,Frame

No	Code	Chinese	English	Qty	Unit	Remark
1	C-01-001	车架后段	Rear part,Frame	1	pcs	
2	C-01-002	空滤器总成	Air filter complete	1	set	
3	C-01-003	空滤器进气管	Air intake, air filter	1	set	
4	C-01-004	空滤器支架	Bracket,Air filter	1	pcs	
5	C-01-005	蓄电池支架	Bracket,battery	1	pcs	
6	C-01-006	车体尾罩	Rear body cover	1	pcs	
7	C-01-007	后挡水板	Inner plastic(black), rear fender	1	pcs	
8	C-01-008	电瓶盒橡胶拉带	Rubber strap, battery	1	pcs	
9	C-01-009	六角带盘螺栓M8×35	Hex bolt M8x35	2	pcs	
10	C-01-010	六角带盘螺栓M8×30	Hex bolt M8x30	2	pcs	
11	C-01-011	六角带盘螺栓M6×30	Hex bolt M6x30	2	pcs	
12	C-01-012	六角带盘螺栓M6×12	Hex bolt M6x12	2	pcs	
13	C-01-013	六角带盘螺栓M6×10	Hex bolt M6x10	2	pcs	
14	C-01-014	沉头螺栓M6×12	Bolt M6x12	3	pcs	
15	C-01-015	自锁螺母M8×1.25	Self-locked nut M8x1.25	4	pcs	
16	C-01-016	平垫Φ8	Flat washer Φ8	4	pcs	
17	C-01-017	弹垫φ8	Sprint washer Φ8	4	pcs	
18	C-01-018	焊接螺母卡子M6	Clip, Nut M6	2	pcs	
19	C-01-019	加大平垫Φ6×Φ18	Large flat washer Φ6×Φ18	2	pcs	

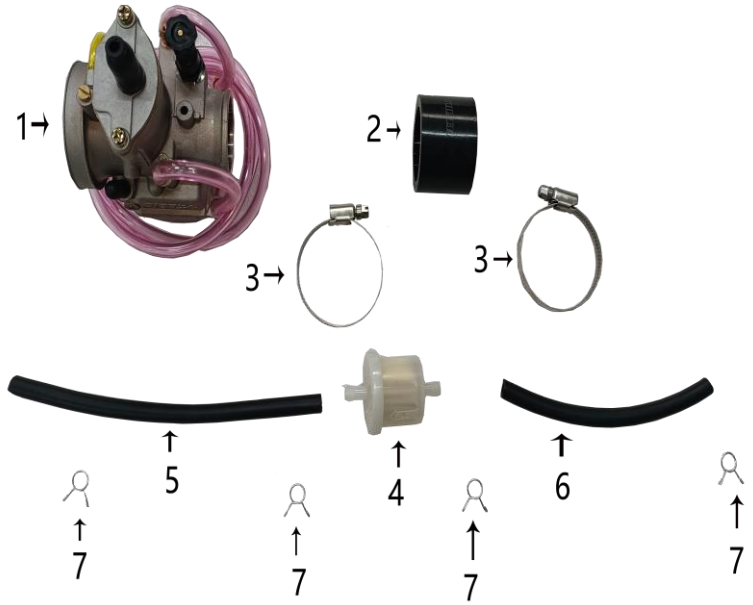

Carburetor						
No	Code	Chinese	English	Qty	Unit	Remark
1	H-00-001	化油器	Carburetor	1	pcs	
2	H-00-002	进气管接头	Connect,air intake	1	pcs	
3	H-00-003	抱箍TJXS35/51mm	Clamp, TJXS35/51mm	2	pcs	
4	H-00-004	燃油过滤器	Fuel filter	1	pcs	
5	H-00-005	燃油管ϕ4×ϕ8×150mm	Fuel lineφ 4×φ 8×150mm	1	pcs	
6	H-00-006	燃油管ϕ4×ϕ8×120mm	Fuel lineφ 4×φ 8×120mm	1	pcs	
7	H-00-007	油管卡簧ϕ8	Circlip φ 8, fuelline	4	pcs	

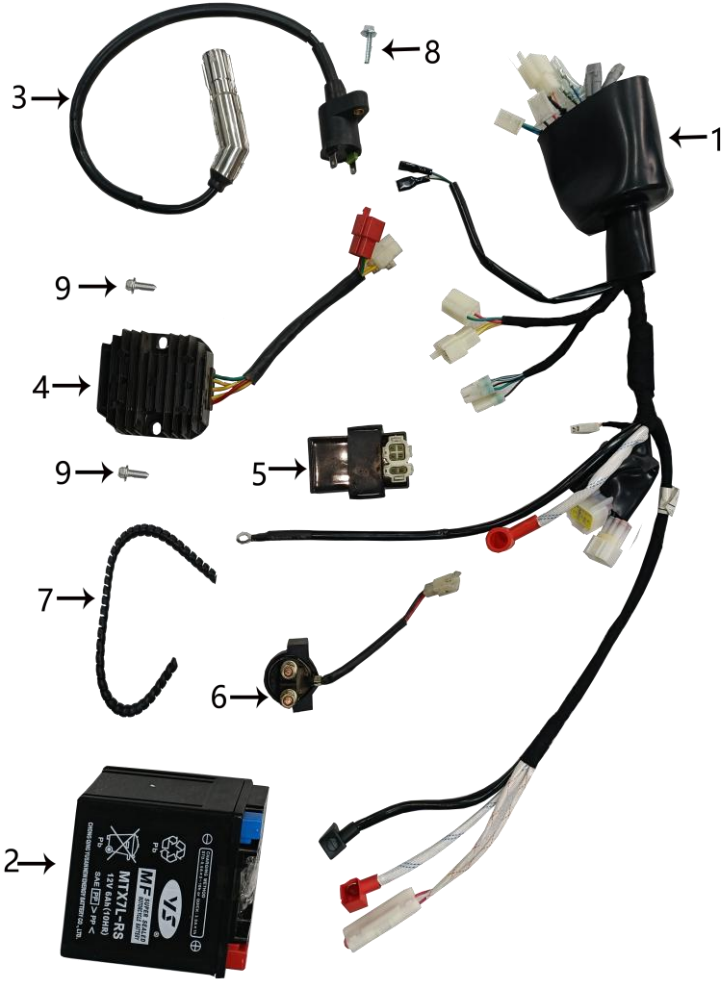

Wire Harness,Electric Complete						
No	Code	Chinese	English	Qty	Unit	Remark
1	Z-02-001	主线缆	Wire harness	1	set	
2	Z-02-002	蓄电池	Battery	1	pcs	
3	Z-02-003	高压包	Ignition coil	1	pcs	
4	Z-02-004	调压器	Regulator	1	pcs	
5	Z-02-005	点火器	CDI	1	pcs	
6	Z-02-006	继电器	Starting relay	2	pcs	
7	Z-02-007	螺旋管	Protected plastic	1	pcs	
8	Z-02-008	六角带盘螺栓M6×20	Inner hex bolt M6x20	1	pcs	
9	Z-02-009	六角带盘螺栓M6×16	Inner hex bolt M6x16	2	pcs	

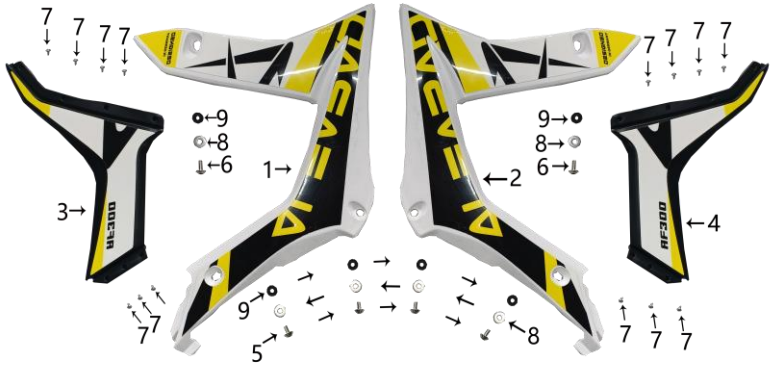

L/R Side Cover,Gas Tank						
No	Code	Chinese	English	Qty	Unit	Remark
1	Y-01-001	左油箱上护罩	L upper cover,gas tank	1	pcs	
2	Y-01-002	右油箱上护罩	R upper cover, gas tank	1	pcs	
3	Y-01-003	左油箱下护罩	L lower cover, gas tank	1	pcs	
4	Y-01-004	右油箱下护罩	R lower cover, gas tank	1	pcs	
5	Y-01-005	内六角大扁头螺栓M6×10	Inner hex flat head bolt M6x10	4	pcs	
6	Y-01-006	内六角大扁头螺栓M6×16	Inner hex flat head bolt M6x16	2	pcs	
7	Y-01-007	自攻钉ST3.5×6.5	Self-tapping screw ST 3.5x6.5	14	pcs	
8	Y-01-008	加大平垫Φ6×Φ18	Large flat washer Φ6×Φ18	6	pcs	
9	Y-01-009	胶平垫Φ6×Φ16mm	Rubber flat washer Φ6×Φ16mm	6	pcs	

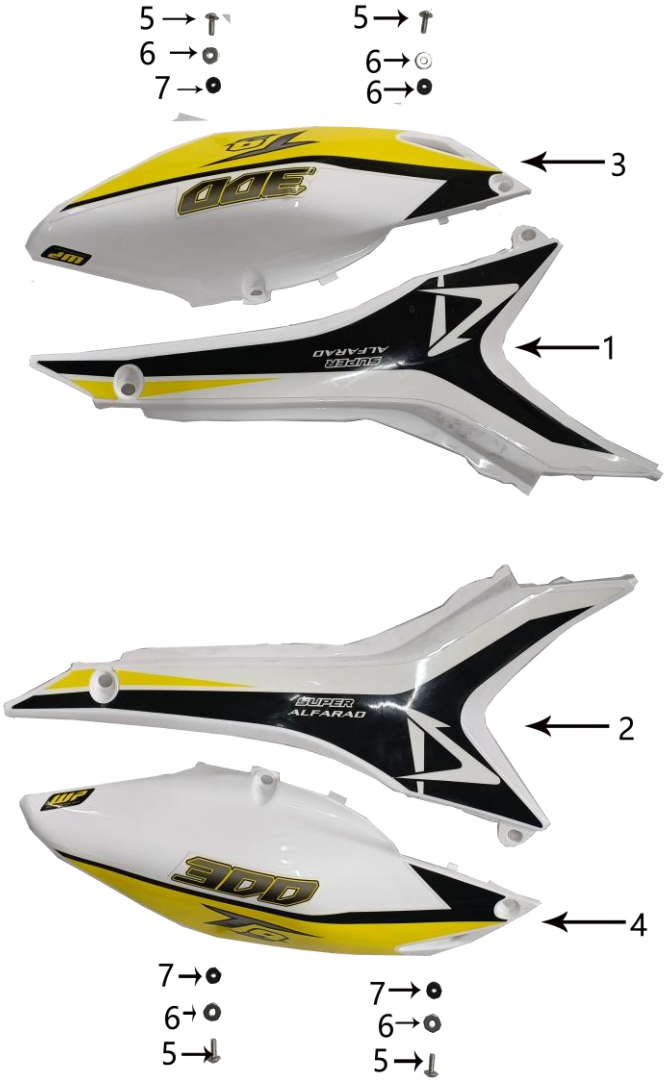

L/R Body Plastic						
No	Code	Chinese	English	Qty	Unit	Remark
1	C-02-001	左车体	L body	1	pcs	
2	C-02-002	右车体	R body	1	pcs	
3	C-02-003	左车体下体	Lower cover, L body	1	pcs	
4	C-02-004	右车体下体	Lower cover, R body	1	pcs	
5	C-02-005	内六角大扁头螺栓M6×16	Inner hex flat head bolt M6x16	4	pcs	
6	C-02-006	加大平垫Φ6×Φ18	Large flat washer Φ6×Φ18	4	pcs	
7	C-02-007	胶平垫Φ6×Φ16mm	Rubber flat washer Φ6×Φ16mm	4	pcs	